Special Features
- Double beared actuating rod
- Mountable via free from backlash pivot heads with a large angle of free movement (up ±12.5°)
- Outstanding linearity
- Resolution better than 0.01 mm
- Long life up to 50 Mio. movements, depending on application
- Protection class IP65
- Cable or connector version available
- Heavy duty version IP67 see data sheet LWX

Applications
- Manufacturing Engineering
- Automation technology
- Vehicle Engineering
- Robotics technology

A robust housing with a simple mounting via pivot heads characterize these transducer series.
The wiper tapping is decoupled free from backlash to the actuating rod, hereby a high accuracy and life span is secured.
This transducer can be used in a wide range of applications such as mechanical and vehicle engineering as well as in automation and robotics technologies. By the simplicity of the measuring system - passive and absolute - is the transducer as far as possible insensitive to electrical interferences and magnetical disturbances.

Description

Material	Housing: aluminium, anodized Actuating rod: stainless steel AISI 303, 1.4305, rotatable
Mounting	Pivot Head Mounting
Bearing	Slide bearing
Resistance element	Conductive plastic
Wiper	Precious metal multi-finger wiper, elastomer damped
Electrical connection	Connector M12x1, 4-pin, A-coded / Cable 3x 0.34 mm² (AWG 22), PVC, shielded, L = 1 m

Mechanical Data

Type	**LWG 0050**	**LWG 0075**	**LWG 0100**	**LWG 0130**	**LWG 0150**	**LWG 0175**	**LWG 0200**	**LWG 0225**	**LWG 0250**	**LWG 0275**	**LWG 0300**	**LWG 0325**	**LWG 0360**	**LWG 0375**	**LWG 0400**	**LWG 0450**	**LWG 0500**	**LWG 0550**	**LWG 0600**	**LWG 0750**
Length of housing [mm] (dim. A ±2 mm)	176	201	227	258	277	303	330	354	379	405	430	456	505	521	549	619	684	747	810	994
Mechanical travel [mm] (dim. B ±2 mm)	54	79	105	138	155	181	210	231	257	283	307	336	368	387	417	460	510	561	612	764
Min. distance between pivot heads [mm] (dim. C, nominal)	222	247	273	303	323	349	375	400	425	451	476	502	551	567	595	665	730	793	856	1040
Operating force, horizontal* [N]	3.6	3.6	3.7	3.9	4.0	4.2	4.4	4.5	4.6	4.8	4.9	5.1	5.2	5.3	5.5	5.7	6.0	6.3	6.6	7.5
Operating force, vertical* [N]	7.4	7.4	7.6	7.9	8.0	8.2	8.5	8.7	8.9	9.2	9.3	9.6	9.8	10.2	10.4	10.6	11.0	11.4	11.9	13.2

*) Initial operating force is dependent on ambient temperature and inactive time.

Ordering Specifications

P/N	Type	Defined electr. range [mm]	Electrical connection
400026102	LWG-0050	50	Connector
400026103	LWG-0075	75	Connector
400026104	LWG-0100	100	Connector
400104722	LWG-0130	130	Connector
400026106	LWG-0150	150	Connector
400026107	LWG-0175	175	Connector
400104723	LWG-0200	200	Connector
400026109	LWG-0225	225	Connector
400026110	LWG-0250	250	Connector
400104724	LWG-0275	275	Connector
400026112	LWG-0300	300	Connector
400104725	LWG-0325	325	Connector
400026114	LWG-0360	360	Connector
400104726	LWG-0375	375	Connector
400104727	LWG-0400	400	Connector
400026118	LWG-0450	450	Connector
400026120	LWG-0500	500	Connector
400026122	LWG-0550	550	Connector
400026124	LWG-0600	600	Connector
400026130	LWG-0750	750	Connector
400026202	LWG-0050-000-201	50	Cable
400026203	LWG-0075-000-201	75	Cable
400026204	LWG-0100-000-201	100	Cable
400104728	LWG-0130-000-201	130	Cable
400026206	LWG-0150-000-201	150	Cable
400026207	LWG-0175-000-201	175	Cable
400104729	LWG-0200-000-201	200	Cable
400026209	LWG-0225-000-201	225	Cable
400026210	LWG-0250-000-201	250	Cable
400104730	LWG-0275-000-201	275	Cable
400026212	LWG-0300-000-201	300	Cable
400104731	LWG-0325-000-201	325	Cable
400026214	LWG-0360-000-201	360	Cable
400104732	LWG-0375-000-201	375	Cable
400104733	LWG-0400-000-201	400	Cable
400026218	LWG-0450-000-201	450	Cable
400026220	LWG-0500-000-201	500	Cable
400026222	LWG-0550-000-201	550	Cable
400026224	LWG-0600-000-201	600	Cable
400026230	LWG-0750-000-201	750	Cable

Drawing

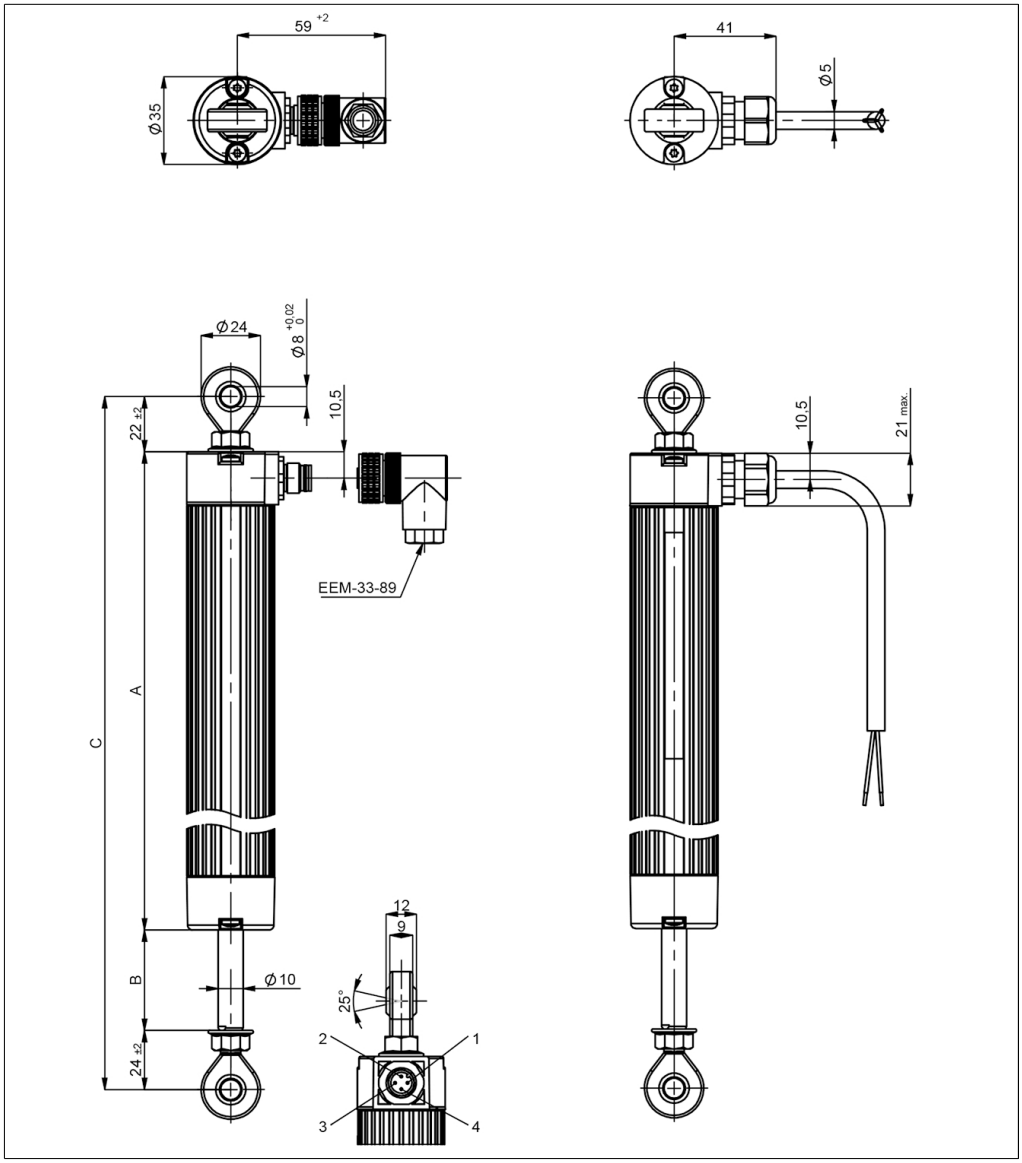

CAD data see www.novotechnik.de/en/download/cad-data/

Technical Data

Type	LWG 0050	LWG 0075	LWG 0100	LWG 0130	LWG 0150	LWG 0175	LWG 0200	LWG 0225	LWG 0250	LWG 0275	LWG 0300	LWG 0325	LWG 0360	LWG 0375	LWG 0400	LWG 0450	LWG 0500	LWG 0550	LWG 0600	LWG 0750
Electr. measuring range [mm]	52	77	102	132	152	178	203	229	254	279	305	330	366	381	406	457	508	559	610	762
Defined electr. range [mm]	50	75	100	130	150	175	200	225	250	275	300	325	360	375	400	450	500	550	600	750
Resistance value [kΩ]	2	3	3	3	5	5	5	5	5	5	5	5	5	5	5	5	5	5	5	10
Resistance tolerance	± 20 %																			
Independent linearity [± %FS]	0.2	0.1	0.1	0.09	0.08	0.07	0.07	0.07	0.07	0.07	0.06	0.05	0.05	0.05	0.05	0.05	0.05	0.05	0.05	0.04
Repeatability	≤ ±0.01 mm																			
Recommended operating wiper current	≤ 1 µA																			
Max. wiper current in case of malfunction	10 mA																			
Max. permissible supply voltage Ub	42 VDC																			
Effective temp. coefficient of the output-to-applied voltage ratio	typ. 5 ppm/K																			
Insulation resistance (500 VDC)	≥ 10 MΩ																			
Dielectric strength (500 VAC, 50 Hz)	≤ 100 µA																			
Environmental Data																				
Max. operational speed	5 m/s																			
Vibration IEC 60068-2-6	20 g, 5 ... 2000 Hz, Amax = 0.75 mm																			
Shock IEC 60068-2-27	50 g, 11 ms																			
Protection class DIN EN 60529	IP65																			
Operating temperature	-30 ... +100°C																			
Operating humidity	0 ... 95 % R.H. (no condensation)																			
Life	typ. > 50 Mio. movements																			
Functional safety	If you need assistance in using our products in safety-related systems, please contact us																			

Important
All values specified in this data sheet for linearity, lifetime and temperature coefficient are only valid for a sensor used as a voltage divider with virtually no load applied to the wiper (Ie ≤ 1 µA).

Connection Assignment

Signal	Connector	Cable
Connection 1	Pin 1	BN
Connection 2 Signal output	Pin 2	BK
Connection 3	Pin 3	RD
Do not connect	Pin 4	-
	Direction of output characteristic while extending the rod: increasing: supply voltage Ub at connection 3 falling: supply voltage Ub at connection 1	

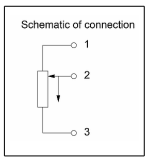

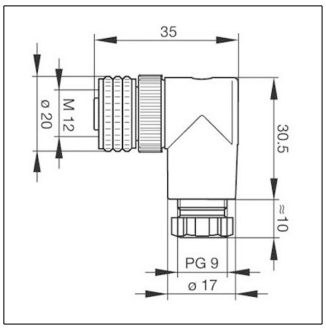

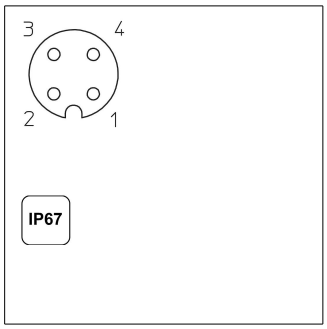

EEM-33-89 (Included in delivery)
M12x1 Mating female connector, 4-pin, angled, A-coded, with coupling nut, screw termination, IP67, not shieldable
Included in delivery

Operating temp.	-25 ... +90°C
Plug housing	PBT
For wire gauge	6 ... 8 mm, max. 0.75 mm²

P/N	Type
400005634	EEM-33-89

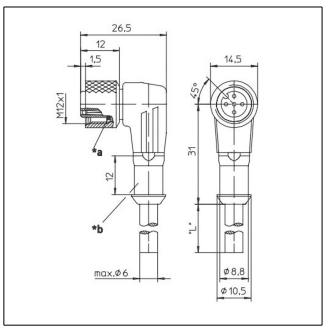

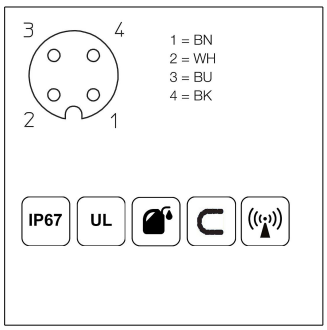

EEM-33-33/63/99
M12x1 Mating female connector, 4-pin, angled, A-coded, with molded cable, shielded, IP67, open ended

Plug housing	PA
Cable sheath	PUR, Ø = max. 6 mm, -25 ... +80°C (moved) -50 ... +80°C (fixed)
Lead wires	PP, 0.34 mm²

P/N	Type	Length
400005601	EEM-33-33	2 m
400005610	EEM-33-63	5 m
400005696	EEM-33-99	10 m

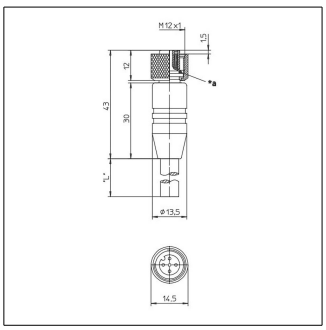

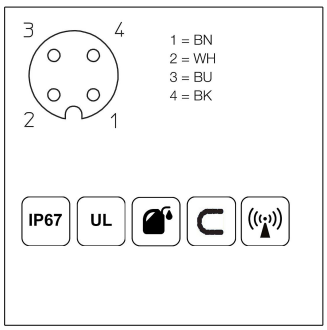

EEM-33-32/62/97
M12x1 Mating female connector, 4-pin, straight, A-coded, with molded cable, shielded, IP67, open ended

Plug housing	PA
Cable sheath	PUR, Ø = max. 6 mm, -25 ... +80°C (moved) -50 ... +80°C (fixed)
Lead wires	PP, 0.34 mm²

P/N	Type	Length
400005600	EEM-33-32	2 m
400005609	EEM-33-62	5 m
400005650	EEM-33-97	10 m

IP67 Protection class IP67 DIN EN 60529

IP68 Protection class IP68 DIN EN 60529

Very good Electromagnetic Compatibiliy (EMC) and shield systems

Very good resistance to oils, coolants and lubricants

Suited for applications in dragchains

UL - approved

CAN CAN-Bus

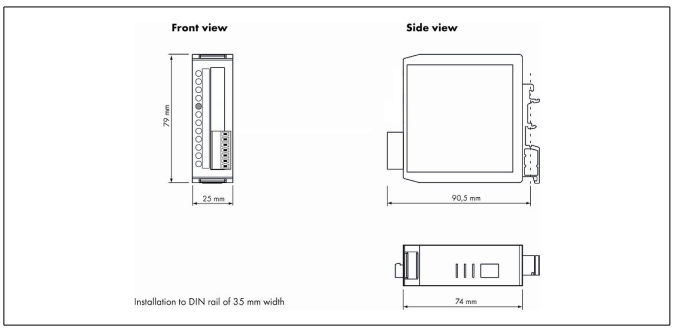

MUP-080
Cost-efficient signal conditioner with fixed output range, voltage or current output. Not adjustable.
Detailed data see separate data sheet.

P/N	Type	Output
400054220	MUP-080-111	0 ... 10 V
400054221	MUP-080-113	4 ... 20 mA

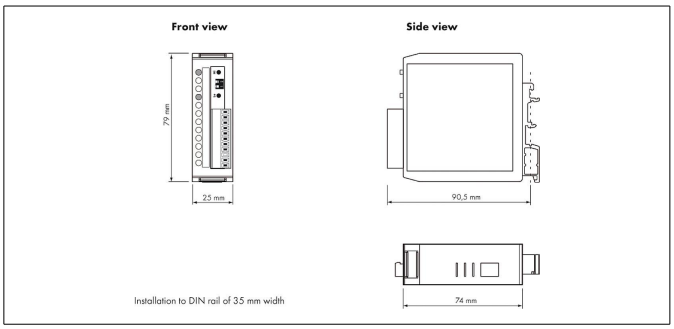

MUP-400
Signal conditioner with simple teach-in function to adapt start and end point. Switchable current or voltage output. Available with or without galvanic isolation.
Detailed data see separate data sheet.

P/N	Type	Isolation
400054201	MUP-400-01	w/o
400054202	MUP-400-11	with

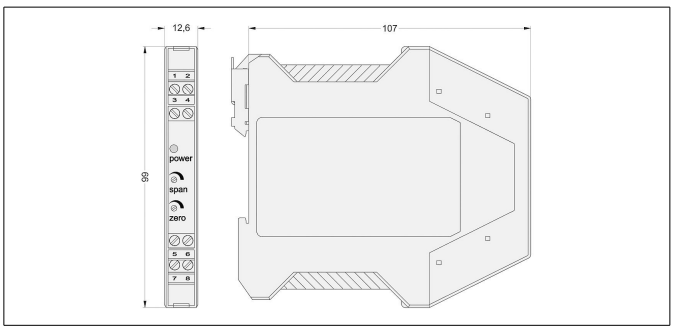

MUP-110
Signal conditioner in compact size with voltage or current output, adjustable zero and span.
Detailed data see separate data sheet.

P/N	Type	Output
400054010	MUP-110-0	0 ... 20 mA
400054011	MUP-110-1	0 ... 10 V
400054014	MUP-110-4	4 ... 20 mA

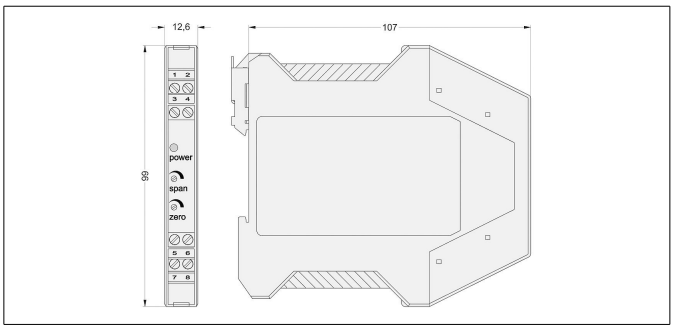

MUP-160
Signal conditioner in compact size with voltage or current output, adjustable zero and span. With galvanic isolation.
Detailed data see separate data sheet.

P/N	Type	Output
400054060	MUP-160-0	0 ... 20 mA
400054061	MUP-160-1	0 ... 10 V
400054064	MUP-160-4	4 ... 20 mA

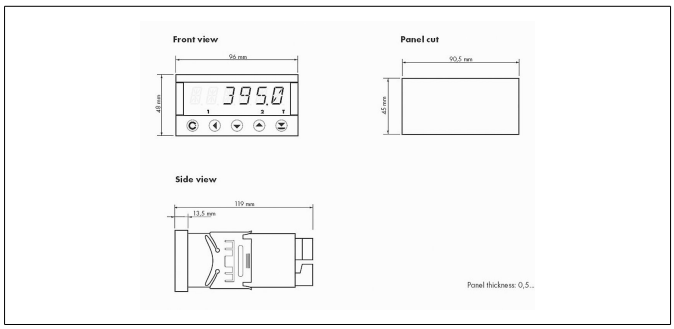

MAP-4000
Multifunctional measuring device with digital display for direct connnection of potentiometric and normalized signals.
• Supply voltage 10...30 VDC, 80...250 VDC or AC
• High accuracy up to 0.1%
• Adjustable supply voltage for sensors 5...24 V
• Temperature coefficient 100 ppm/K
• Optional RS 232, RS 485, analog output, limited switch
• Complete data see separate data sheet MAP-4000

VFA Elektronik Ölçüm Teknolojileri ve Otomasyon Hizmetleri San. Tic. Ltd. Şti.
Fevzi Çakmak Mah. Aslım Cad. No:40/Z Karatay - KONYA
T.0332 235 1887 - 88 | F.0332 235 99 98 | M.0553 296 52 42
www.vfaelektronik.com | www.vfaelektronik.com.tr
info@vfaelektronik.com