THERMAL MASS FLOW SENSORS
S 401/S 421

SMARTPHONE ANDROID APP
For remote configuration

Measure consumption and flow — **optimize process efficiency**

S 421 inline type

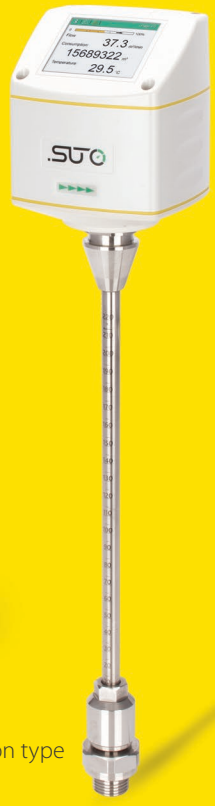

S 401 insertion type

S 401/S 421 FEATURES

SMARTPHONE ANDROID APP
For remote configuration

ACCURATE RESULTS
Very fast response time

EASY PROCESS MONITORING
Effective and inexpensive measurements

TOTAL FLOW
High accuracy and reliable measurements

Optional color display for online values, consumption counter and sensor settings. 10-digit counter (1 999 999 999)

S 401/S 421 FEATURES AT A GLANCE

- Measures standard flow, mass flow and consumption
- Thermal mass flow, independent of pressure and temperat changes
- IP65 casing provides robust protection in rough industrial environment
- Very fast response time
- High accuracy and wide measuring range
- Isolated mA and pulse output signals or Modbus/RTU interface
- Selectable gas type (Some gases require real gas calibration!)
- Sensor can be calibrated in 2 different gases

S 401 BENEFITS

- Tube diameters of DN25 to DN500.
- 2 installation types: center installation and 100 mm insertion depth installation for bigger pipes (> DN250)
- Installation under pressure through 1/2" ball valve

S 421 BENEFITS

- Pipes sizes available: DN15, DN20, DN32, DN40, DN50, DN65, DN80
- Fits your needs: various process connections available (R-thread, EN 1092-1 flange or ANSI flange)
- Exchangeable sensor unit (easy sensor swap)

S 401/S 421 INSTALLATION AND SENSOR REMOVAL

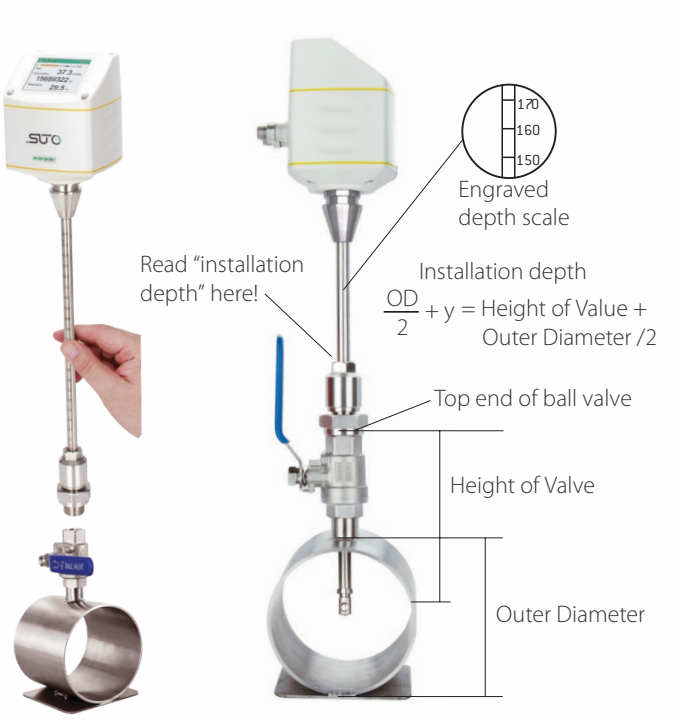

S 401 Installation through a ball valve

Removal of sensor unit S 421

Optional flow conditioner to remove inlet straight pipe requirement

Sensor configuration through wireless connection

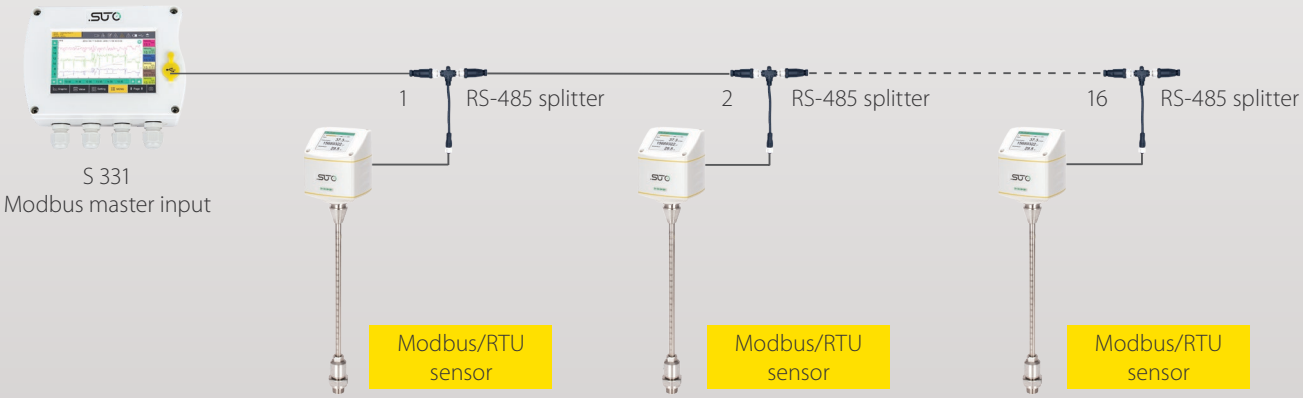

Sensors can be easily connected via a Modbus RTU daisy chain.

S 401/S 421 TECHNICAL DATA

General Specifications	
Accuracy	1.5% of reading + 0.3% full scale (Optional 1% of reading)
Repeatability	0.25% of reading
Sampling rate	> 10 samples / sec
Reference conditions	Can be set by user. Standard conditions are Ps = 0.1 MPa and Ts = 20°C
Medium conditions:	-30°C ... + 140°C / relative humidity < 90% no condenstation
Transport Temperature:	-30... +70°C
Material:	Metal parts 1.4404 (SUS 316L) Casing PC + ABS Sensor: Ceramic with glass coating
Classification:	IP 65
Electrical connection:	2 x M12, 5 poles (2 x M12 plug with screw terminals included)
Approvals:	CE, RoHS, FCC
Operating temperature	-30°C ... +140°C fluid temperature -30°C ... +70°C casing -10°C ... +50°C casing with display
Operating pressure	**S 401**: 0 ... 5.0 MPa (>1.6 MPa need installation device) **S 421**: 0 ... 1.6 MPa (Optional: 4.0 MPa)
Analogue output	Signal: 4 ... 20 mA, isolated Scaling: 0 ... max flow Max load: 250R
Pulse output	Signal: Isolated switch output, normally open, Max 30 VDC, 20 mA Scaling: 1 pulse per consumption unit
Modbus RTU	Isolated RS-485 with Modbus RTU protocol
Power supply	15 ... 30 VDC / 200 mA

Volumetric flow ranges		S401				S421
Inch	DN	Di (mm)	S 401-S (m^3/h)	S 401-M (m^3/h)	S 401-H (m^3/h)	Measuring range from to
½"	DN15					0.5 ... 90 m^3/h
¾"	DN20					0.9 ... 170 m^3/h
1"	DN25	27.3	0.5 ... 147.7	0.6 ... 294.7	0.6 ... 356.9	1.5 ... 290 m^3/h
1¼"	DN32	36.0	0.9 ... 266.3	1.2 ... 531.5	1.2 ... 643.5	2 ... 500 m^3/h
1½"	DN40	41.9	1.2 ... 366.7	1.5 ... 731.9	1.5 ... 886.2	3 ... 700 m^3/h
2"	DN50	53.1	2.0 ... 600.1	2.5 ... 1197.6	3.0 ... 1450.0	4 ... 1000 m^3/h
2½"	DN65	68.9	3.5 ... 1026.5	5.0 ... 2048.6	5.0 ... 2480.4	6 ... 1500 m^3/h
3"	DN80	80.9	5.0 ... 1424.4	7.0 ... 2842.7	7.0 ... 3441.9	8 ... 2500 m^3/h
4"	DN100	100.0	10 ... 2183.3	12 ... 4357.2	12.0 ... 5275.7	
5"	DN125	125.0	13 ... 3419.6	18 ... 6824.4	18.0 ... 8263.1	
6"	DN150	150.0	18 ... 4930.1	25 ... 9838.9	25.0 ... 11913.1	
8"	DN200	200.0	26 ... 8785.6	33 ... 17533.3	42.0 ... 21229.5	
10"	DN250	250.0	40 ... 13743.9	52 ... 27428.5	60.0 ... 33210.7	
12"	DN300	300.0	60 ... 19814.8	80 ... 39544.1	100.0 ... 47880.4	
		The table shows flow ranges up to 300 mm pipe diameter at standard conditions in air. Other standard conditions and gases flow ranges are available on request. In larger pipe diameters flow can also be measured.				

Stated measuring ranges under following conditions:

- Standard flow in air
- Reference pressure: 1000 hPa
- Reference Temperature: +20°C

S 401/S 421 DIMENSIONS

S 401

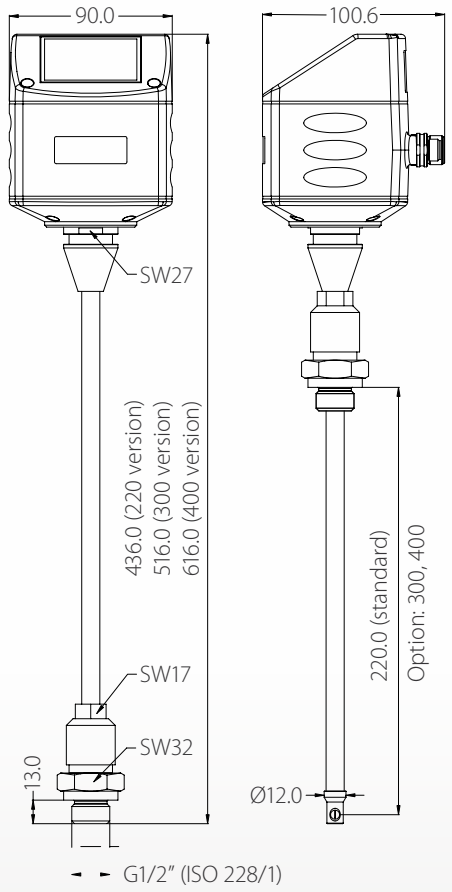

S 421 thread type

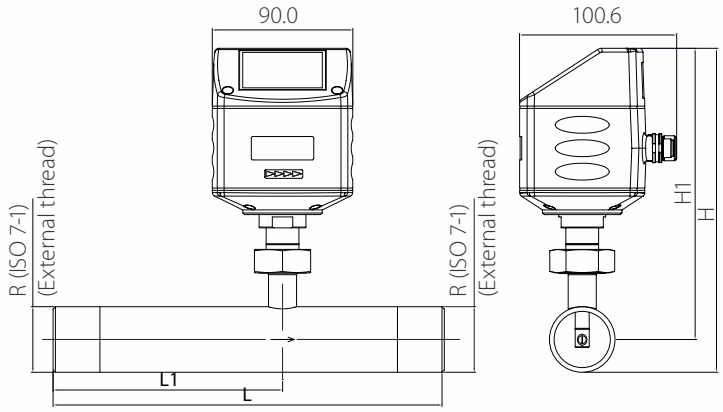

Pipe nominal size inch / (DN)	L total length (mm)	L1 total length (mm)	H total height (mm)	H1 from pipecenter to casing top (mm)	R External Thread
½"(DN15)	300	210	197.4	186.7	R½"
¾" (DN20)	475	275	200.2	186.7	R¾"
1"(DN25)	475	275	203.6	186.7	R1"
1¼"(DN32)	475	275	207.9	186.7	R1¼"
1½"(DN40)	475	275	210.9	186.7	R1½"
2"(DN50)	475	275	216.9	186.7	R2"
2½"(DN65)	475	275	232.7	194.6	R2½"
3"(DN80)	475	275	245.5	201.0	R3"

S 421 flange type

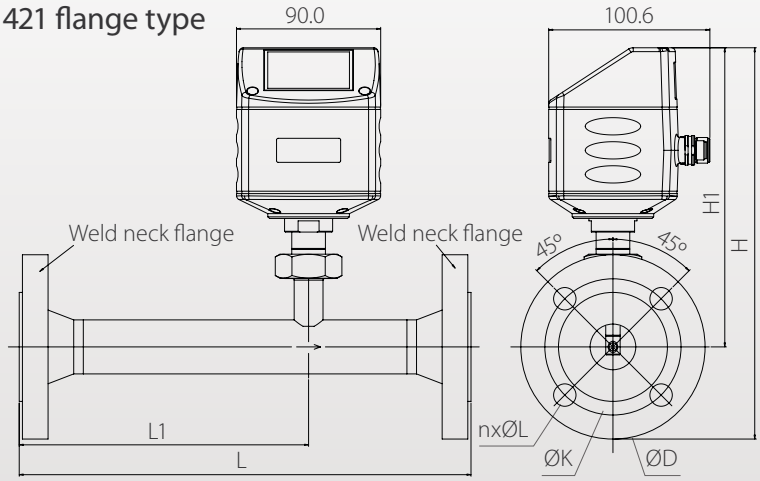

Pipe nominal size inch / (DN)	L total length (mm)	L1 total length (mm)	H total height (mm)	H1 from pipecenter to casing top (mm)
½"(DN15)	300	210	234.2	186.7
¾"(DN20)	475	275	239.2	186.7
1"(DN25)	475	275	244.2	186.7
1¼"(DN32)	475	275	256.7	186.7
1½"(DN40)	475	275	261.7	186.7
2"(DN50)	475	275	269.2	186.7
2½"(DN65)	475	275	287.1	194.6
3"(DN80)	475	275	301.0	201.0

Optional flow conditioner

No more straight inlet requirements

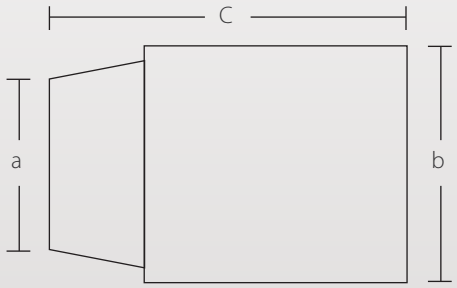

Order No.	Dimensions	a	b in mm	c in mm
A 1070	DN15	R 1/2"	24	64
A 1071	DN20	R 3/4"	32	69
A 1072	DN25	R 1"	37	75
A 1073	DN32	R 1.25"	45	92
A 1074	DN40	R 1.5"	54	92
A 1075	DN50	R 2"	68	105
A 1076	DN65	R 2.5"	80	128
A 1077	DN80	R 3"	95	142

S 401/S 421 ORDERING

Visit our website or e-mail us:
www.suto-itec.com
sales@suto-itec.com

Please use the following tables to assist in placing your order with our sales staff.

S 401 Thermal Mass Flow Meter (Insertion type)		
Order No.	**Code**	**Description**
S6954100	S4010	S401 Flow sensor, 220mm shaft
S6954101	S4011	S401 Flow sensor, 300mm shaft
S6954102	S4012	S401 Flow sensor, 400mm shaft
S6954103	S4013	S401 Flow sensor, 160mm shaft
Connection thread		
Standard	A	G1/2"
A1005	B	NPT 1/2" Adapter
A1006	C	PT 1/2" Adapter
Output		
A1410	A	S401: Analog 4... 20 mA, Pulse output
A1411	B	S401: Modbus RTU output
A1413	C	S401: Analog 4... 20 mA, Pulse output compatible to S 400
Range		
Standard	A	S401: Standard range version (92,7 m/s)
A1401	B	S401: Max range version (185 m/s)
A1402	C	S401: High speed range version (220 m/s)
A1403	D	S401: Low range version (1/3 or standard range)
Display		
Standard	A	S401: Without display
A1420	B	S401: With display
Calibration		
Standard	A	S401: Standard calibration
A1404	B	S401: High accuracy calibration (1% +- 0.3%F.S.)
A1403	C	S401: Bi-directional calibration
Gas type		
A1007	A	Air
A1008	B	CO2
A1009	C	O2 (Oil- & grease-free cleaned)
A1010	D	N2
A1011	E	N2O
A1012	F	Argon
A1013	G	Natural Gas
A1014	H	H2 (real gas calibration)
A1015	I	Other gas (Please specify)
A1016	J	He (real gas calibration)
A10177	K	C3H8
	Z	No Second Gas

Example: S 4010ABABAA
S401,220mm, Modbus/RTU, Standard range, With display, Standard calibration, Air

S 421 Thermal Mass Flow Meter (Inline type)		
Order No.	**Code**	**Description**
S6954120	S4210	S421 Flow sensor, in-line type, 1.6 MPa version
S6954121	S4211	S421 Flow sensor, in-line type, 4.0 MPa version
Measuring section connection *		
A130X	A	R-thread (IOS-7-1)
A132X	B	Flange, EN 1092-1, PN40
A134X	C	Flange ANSI 16.5
Measuring section size *		
XXX1	A	DN15 (1/2")
XXX2	B	DN20 (3/4")
XXX3	C	DN25 (1")
XXX4	D	DN32 (1.25")
XXX5	E	DN40 (1.5")
XXX6	F	DN50 (2")
XXX7	G	DN65 (2.5")
XXX8	H	DN80 (3")
Output		
A1410	A	S421: Analog 4... 20 mA, Pulse output
A1411	B	S421: Modbus RTU output
A1413	C	S421: Analog 4... 20 mA, Pulse output compatible to S 400
Range		
Standard	A	S421: Standard range version (92.7 m/s)
A1403	D	S421: Low range version (1/3 or standard range)
Display		
Standard	A	S421: Without display
A1403	B	S421: With display
Calibration		
Standard	A	S421: Standard calibration
A1404	B	S421: High accuracy calibration (1% +- 0.3%F.S.)
Gas type		
A1007	A	Air
A1008	B	CO2
A1009	C	O2 (Oil- & grease-free cleaned)
A1010	D	N2
A1011	E	N2O
A1012	F	Argon
A1013	G	Natural Gas
A1014	H	H2 (real gas calibration)
A1015	I	Other gas (Please specify)
A1016	J	He (real gas calibration)
A10177	K	C3H8
	Z	No Second Gas
Flow conditioner		
A107X	A	R-thread flow conditioner

Example: S 4210AFBABAA
S421, 1.6 MPa, R-thread, DN50, Modbus/RTU, Standard range, With display, Standard calibration, Air

Attention:
- Measuring section connection and size must be combined to get the order number. Exmaple: A1306 = R-thread DN50

International Edition (EN) - 01/19. © 2019 SUTO iTEC GmbH. www.suto-itec.com